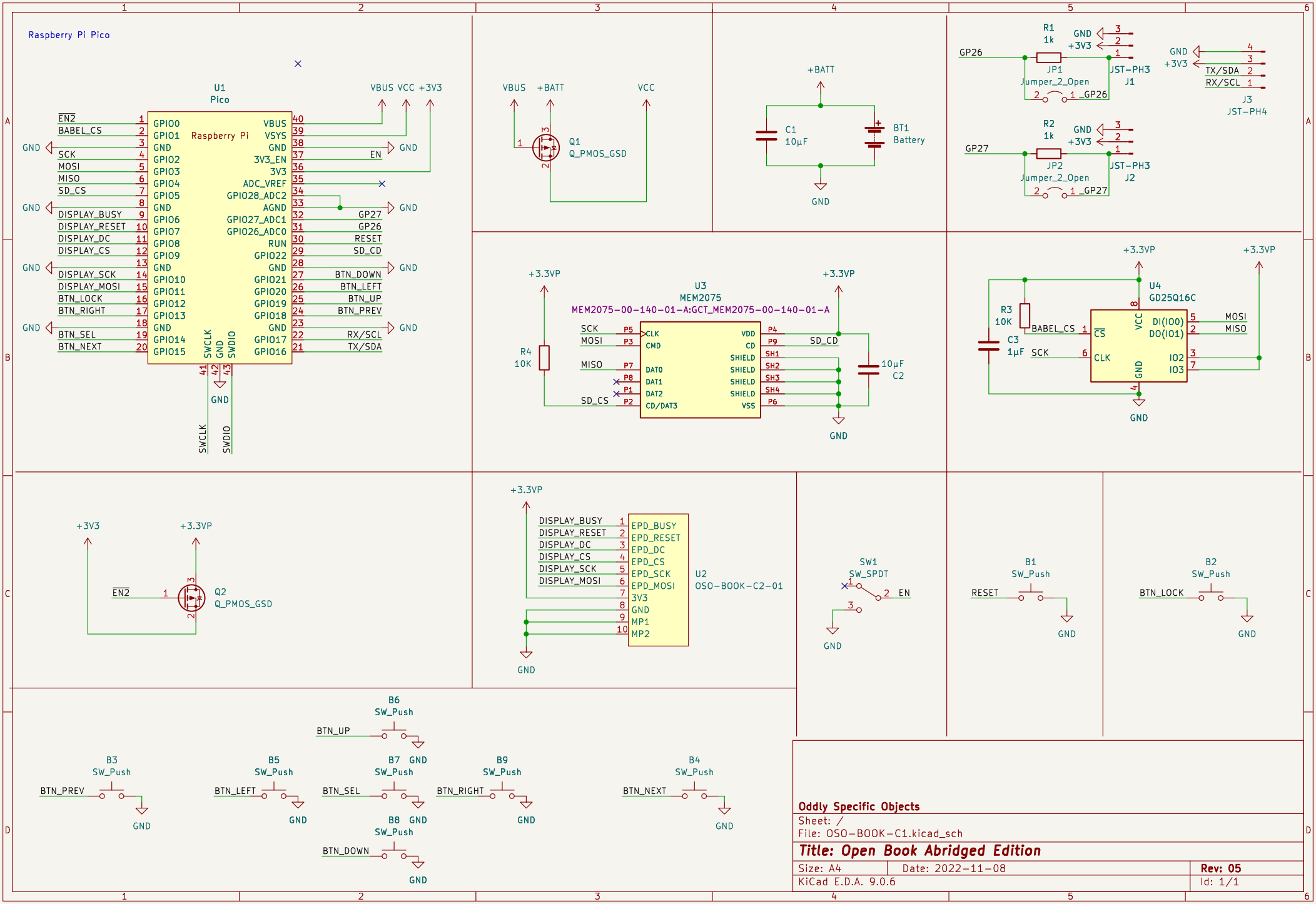

Oddly Specific Objects

Sheet: /

File: OSO-BOOK-C1.kicad_sch

Title: Open Book Abridged Edition

Size: A4	Date: 2022-11-08	**Rev: 05**
KiCad E.D.A. 9.0.6		Id: 1/1